Xenon Flash Tube model XFTA-55-230

Flash Tube Assembly with Reflector, Lens, and wiring

Sales: www.XENONFLASHTUBES.com INFO@XENONFLASHTUBES.com

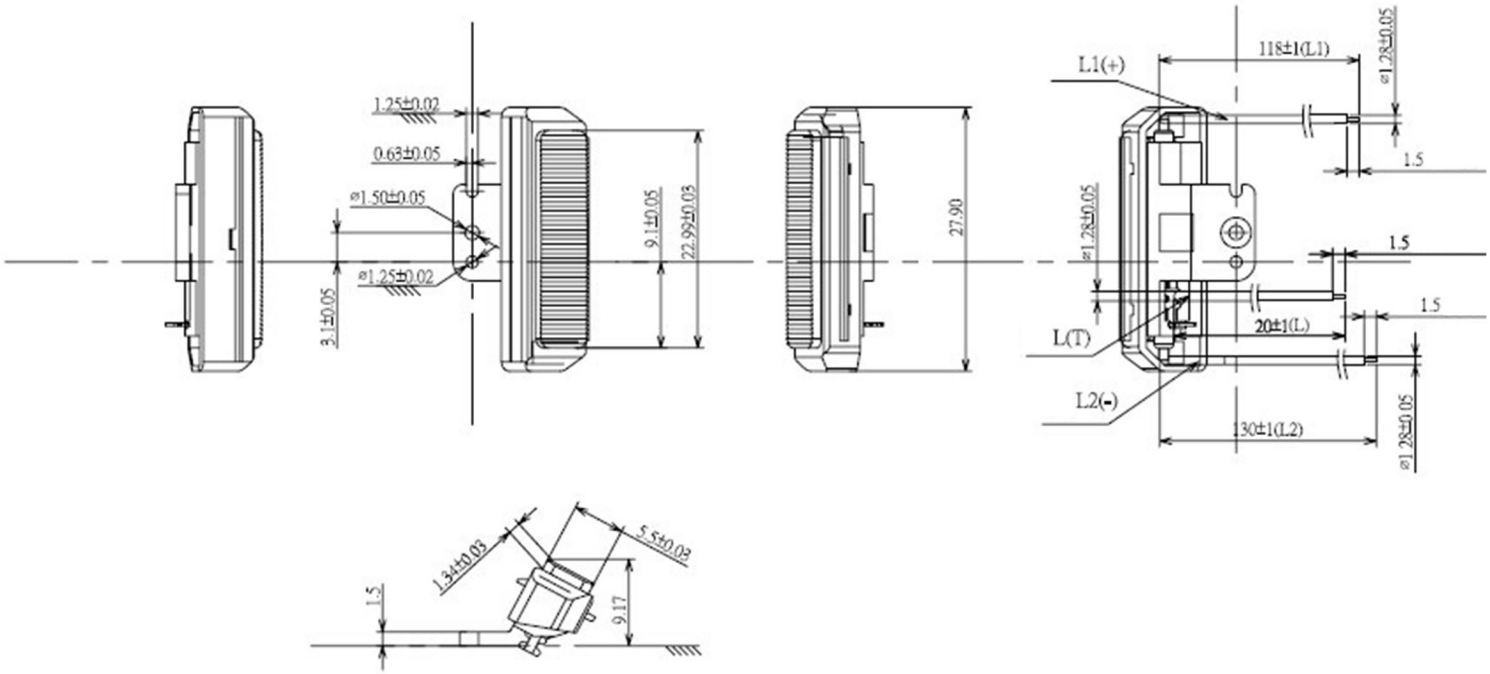

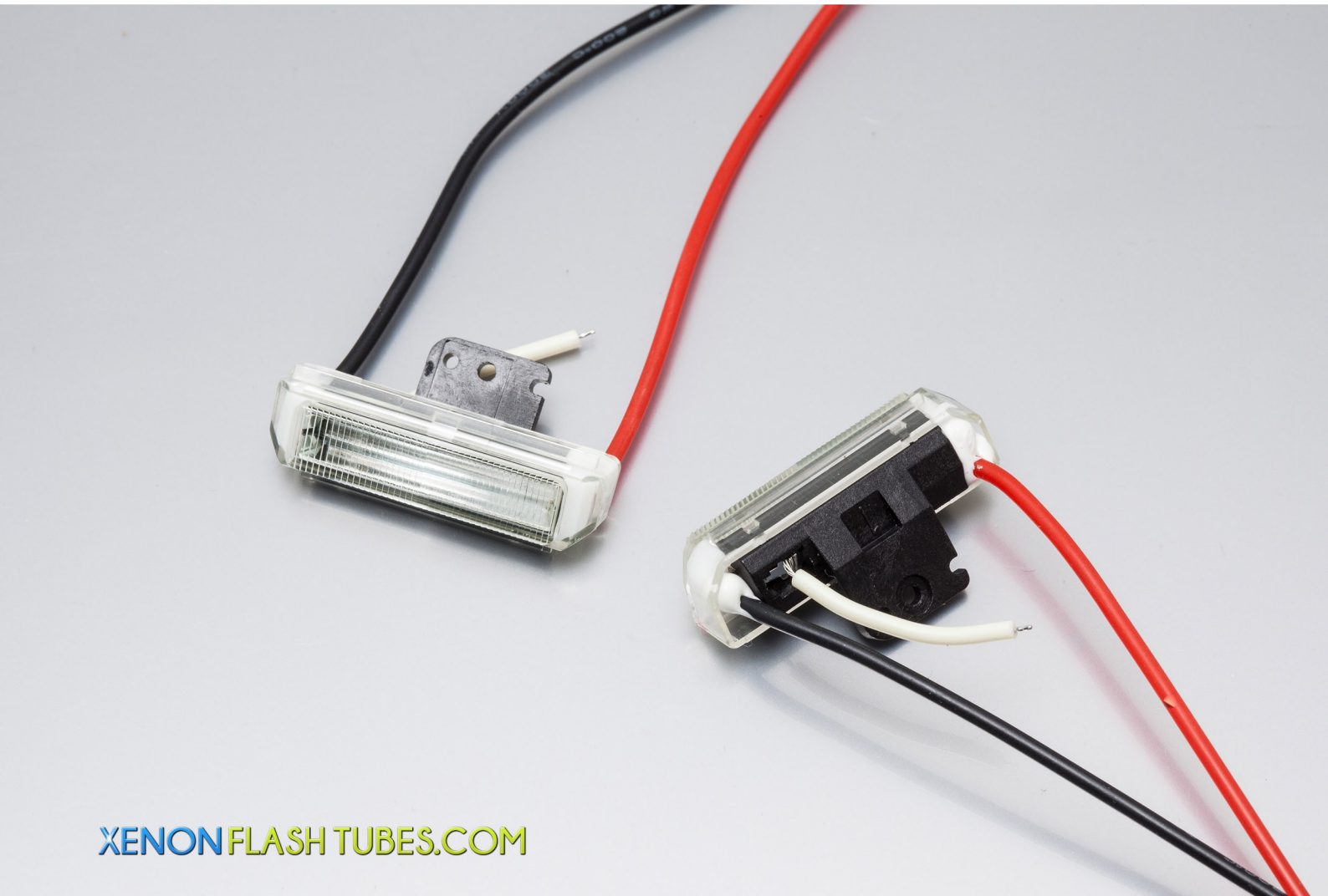

XENONFLASHTUBES.COM